Journal of Applied Physics

Theoretical investigation of charge transfer between the NV^- center in diamond and substitutional N and P

Cite as: J. Appl. Phys. **130**, 155102 (2021); https://doi.org/10.1063/5.0061396
Submitted: 25 June 2021 • Accepted: 10 September 2021 • Published Online: 15 October 2021

Rodrick Kuate Defo, Xingyu Zhang, Steven L. Richardson, et al.

View Online Export Citation CrossMark

ARTICLES YOU MAY BE INTERESTED IN

Quantum computer based on color centers in diamond
Applied Physics Reviews **8**, 011308 (2021); https://doi.org/10.1063/5.0007444

Widefield quantum microscopy with nitrogen-vacancy centers in diamond: Strengths, limitations, and prospects
Journal of Applied Physics **130**, 150902 (2021); https://doi.org/10.1063/5.0066733

Effect of grain boundaries on the work function of hafnium: A first-principles investigation
Journal of Applied Physics **130**, 155103 (2021); https://doi.org/10.1063/5.0060197

Lock-in Amplifiers up to 600 MHz
Zurich Instruments
Watch

© 2021 Author(s).

Journal of Applied Physics ARTICLE scitation.org/journal/jap

Theoretical investigation of charge transfer between the NV^- center in diamond and substitutional N and P

Cite as: J. Appl. Phys. **130**, 155102 (2021); doi: 10.1063/5.0061396
Submitted: 25 June 2021 · Accepted: 10 September 2021 ·
Published Online: 15 October 2021

View Online Export Citation CrossMark

Rodrick Kuate Defo,[1,2,a)] Xingyu Zhang,[3] Steven L. Richardson,[2,4] and Efthimios Kaxiras[2,5]

AFFILIATIONS

[1]Department of Electrical and Computer Engineering, Princeton University, Princeton, New Jersey 08540, USA
[2]John A. Paulson School of Engineering and Applied Sciences, Harvard University, Cambridge, Massachusetts 02138, USA
[3]Lincoln Laboratory, Massachusetts Institute of Technology, Lexington, Massachusetts 02421, USA
[4]Department of Electrical and Computer Engineering, Howard University, Washington, DC 20059, USA
[5]Department of Physics, Harvard University, Cambridge, Massachusetts 02138, USA

[a)]**Author to whom correspondence should be addressed:** rkuatedefo@princeton.edu

ABSTRACT

The nitrogen-vacancy (NV) lattice defect in diamond, consisting of an N substitutional atom and an adjacent C vacancy, is commonly observed in two charge states, negative (NV^-) and neutral (NV^0). The NV^- defect exhibits spin state-dependent fluorescence and is, therefore, amenable to optical methods for spin-state readout, while the NV^0 is not. Hence, the NV^- defect is much more useful for quantum sensing and quantum information processing. However, only NV^0 electroluminescence has been observed, even from centers showing NV^- in photoluminescence. In the present work, we use first-principles electronic structure calculations to determine adiabatic charge transition levels for the conversion of NV^- to NV^0 in the presence of substitutional N or P impurities, which provide the charge of the NV^- center. We find that the adiabatic charge transition levels in the presence of such impurities lie at energies close to or lower than the zero-phonon line of the NV^- center and that these energies only decrease as the concentration of N donors increases. This work, therefore, elucidates the absence of observed electroluminescence from the NV^- and proposes a path toward observation of the phenomenon.

Published under an exclusive license by AIP Publishing. https://doi.org/10.1063/5.0061396

I. INTRODUCTION

The NV^- center is a defect in diamond crystals consisting of a substitutional nitrogen atom with an adjacent carbon vacancy in the negative charge state. Defects with similar promise in quantum information have been studied,[1–8] though the NV^- center is particularly notable for the plethora of its applications in life sciences, magnetometry, and quantum information processing[9–12] due to its optical spin-state detection, long-lived spin coherence, and demonstrated evidence of coherent control of surrounding nuclear spins.[13–17] The magnetic sensitivity of the NV^- center can be used with magneto-optical spin detection and other techniques to map nanoscale magnetic field variations under ambient conditions.[18–20] This ability to optically interface with its spin states also makes possible the initialization, transfer, entanglement, and readout of the spin states.[21–24] The NV^0 center is the corresponding neutral state of the defect but does not permit any of the spin-based applications of the NV^- center. However, electroluminescence has only been observed from the NV^0 center, even when a center shows the signature of NV^- in photoluminescence.[25,26] Observed electroluminescence for the NV^- would be highly desirable as it would imply the ability to perform nanometer scale spin qubit control.[27–31] Here, we investigate the energies associated with the conversion of NV^- to NV^0 where the NV^- is in the presence of substitutional N^+, N^0, or P^+ to elucidate the absence of observed electroluminescence from the NV^-.

In brief, our theoretical argument is the following. As the potential used to inject current in order to observe electroluminescence is gradually swept to higher values, the electrons

Published under an exclusive license by AIP Publishing

associated with the NV^- centers are given the energy needed to leave the defect, resulting in exponential suppression of the number of NV^- centers as the charge transition level in units of k_BT is decreased, where k_B is the Boltzmann constant and T is the temperature. The relevant level is the adiabatic charge transition level in the presence of the surrounding substitutional impurities. We will show that the adiabatic charge transition level is near or below the level of the zero-phonon line (ZPL) of the NV^- in diamond of 1.945 eV for NV^- in the presence of substitutional N^+, N^0, or P^+. Given our finding that the adiabatic charge transition level for $NV^- \rightarrow NV^0$ in the presence of substitutional N^+ is higher than the ZPL of the NV^- in diamond, it should in principle be possible to observe electroluminescence from the NV^- with ultra-low concentrations of substitutional N (equal to or below the concentration of NV^- due to high conversion efficiency to NV), potentially using growth and processing methods.[32]

In this paper, we first provide in Sec. II a description of the computational methods and approaches we will use. We then include in Sec. III a discussion of salient results for the adiabatic charge transition levels of NV^- in the presence of substitutional N^+, N^0, or P^+ and summarize our conclusions.

II. COMPUTATIONAL METHODS AND APPROACH

To obtain the quantities relevant for the determination of the charge transition levels, we performed first-principles DFT calculations for the various defects in diamond using the VASP code.[33–35] Atomic structures were converged using the screened hybrid functional of Heyd, Scuseria, and Ernzerhof (HSE) with the original parameters (0.2 $Å^{-1}$ for screening and 25% for mixing).[36,37] The atomic positions were relaxed until the magnitude of the Hellmann–Feynman forces was smaller than 10^{-2} eV $Å^{-1}$ on each atom, and for the stoichiometric conventional unit cell, the lattice parameters were concurrently relaxed. The wavefunctions were expanded on a plane-wave basis with a cutoff energy of 430 eV and a Monkhorst–Pack grid of $8 \times 8 \times 8$ k-points was used for integration in the reciprocal space for the stoichiometric conventional unit cell. The relaxed lattice parameters of the conventional unit cell were then used for the supercell structures. These supercell structures used 512 atoms ($4 \times 4 \times 4$ multiple of the conventional unit cell) with gamma-point integration. To estimate the distance between the C vacancy (V) and the N atom in the NV defects, the midpoint between the N atom and the V was first obtained by averaging the positions of all six C atoms that were nearest-neighbors of either the N atom or the V. The distance between the midpoint and the N atom was then multiplied by two to obtain the estimate of the desired value. If we calculate the distance between the N atom in the N_C^0 defect and the farthest nearest-neighbor carbon atom from the N atom (where the farthest nearest-neighbor carbon atom plays the role of the vacancy) using this approach, we find 1.99 Å. If we assume that the position of the farthest nearest-neighbor carbon atom from the N atom is given by the average of the positions of its nearest-neighbor atoms (the three C atoms and the single N atom), we find 1.74 Å. The actual value in that case is 2.02 Å. Though the use of a ghost atom as implemented here in Gaussian 16[38] may be preferable, the approach we have employed here is ultimately suitable for use in identifying defects based on bond lengths.

Our approach to obtaining the adiabatic charge transition levels for $NV^- \rightarrow NV^0$ in the presence of N or P substitutional impurities is to consider the equilibrium reaction,

$$NV^- + X_C^{Q+1} \rightleftharpoons NV^0 + X_C^Q, \tag{1}$$

where $X_C^Q = N_C^0$, N_C^-, or P_C^0 and X_Y implies that X is substituting for Y in the crystal. We can break up Eq. (1) into the ionization and reduction reactions,

$$NV^- \rightleftharpoons NV^0 + e^-, \quad X_C^{Q+1} + e^- \rightleftharpoons X_C^Q. \tag{2}$$

The equilibrium constants for the ionization and reduction reactions in Eq. (2) are, respectively,

$$\frac{[NV^-]}{[NV^0][e^-]_{\text{ion}}} = \frac{\exp(-\mu(NV^-)/k_BT)}{\exp(-\mu(NV^0)/k_BT)\cdot\exp(-\mu_e(NV^0 \rightarrow NV^-)/k_BT)}, \tag{3}$$

$$\frac{[X_C^{Q+1}][e^-]_{\text{red}}}{[X_C^Q]} = \frac{\exp(-\mu(X_C^{Q+1})/k_BT)\cdot\exp(-\mu_e(X_C^{Q+1} \rightarrow X_C^Q)/k_BT)}{\exp(-\mu(X_C^Q)/k_BT)}, \tag{4}$$

where the chemical potentials are defined in detail below. The concentrations on the left side of the equalities in the expression for the equilibrium constants are measured in mole fractions. Given the relationship between the equilibrium constant and the change in the Gibbs free energy, the chemical potentials on the right side of the equalities can be identified with the change in the Gibbs free energy when the given species is added to the system, whether that species be a defect or an electron. Taking the product of Eqs. (3) and (4) yields

$$\frac{[NV^-][X_C^{Q+1}][e^-]_{\text{red}}}{[NV^0][e^-]_{\text{ion}}[X_C^Q]} = \frac{\exp\{-[\mu(NV^-) + \mu(X_C^{Q+1}) + \mu_e(X_C^{Q+1} \rightarrow X_C^Q)]/k_BT\}}{\exp\{-[\mu(NV^0) + \mu_e(NV^0 \rightarrow NV^-) + \mu(X_C^Q)]/k_BT\}}. \tag{5}$$

Charge conservation requires $[e^-]_{\text{red}} = [e^-]_{\text{ion}}$, and thermodynamics dictates

$$\frac{[X_C^{Q+1}]}{[NV^-]} = \frac{\exp\{-\mu(X_C^{Q+1})/k_BT\}}{\exp\{-\mu(NV^-)/k_BT\}}, \quad \frac{[X_C^Q]}{[NV^0]} = \frac{\exp\{-\mu(X_C^Q)/k_BT\}}{\exp\{-\mu(NV^0)/k_BT\}}, \tag{6}$$

Published under an exclusive license by AIP Publishing

leading to

$$\frac{[\mathrm{NV}^-]}{[\mathrm{NV}^0]} = \frac{\exp\{-[\mu(\mathrm{NV}^-) + \mu_e(\mathrm{X_C^{Q+1}} \to \mathrm{X_C^Q})/2]/k_BT\}}{\exp\{-[\mu(\mathrm{NV}^0) + \mu_e(\mathrm{NV}^0 \to \mathrm{NV}^-)/2]/k_BT\}}. \quad (7)$$

We note that if the electronic chemical potentials are taken to be equal because the defects in the reaction are both in the same crystal and are sufficiently isolated so that their environments can be treated as identical, then the electronic chemical potentials will cancel and the isolated defect case will be recovered. It is precisely an adiabatic equilibrium interaction between two different defects resulting in charge transfer that requires such an expression with unequal electronic chemical potentials. Since we are dealing with the loss or gain of a single electron and given that defects cannot lose a fraction of an electron, only pairwise interactions need to be considered. In analogy with the isolated defect case, we conclude that the adiabatic charge transition level, $(0/-)$, for the conversion of NV^- to NV^0 in the presence of the substitutional N or P impurity must be given by the Fermi level value for which the concentrations of NV^- and NV^0 are equal. Explicitly,

$$(0/-) = \mu(\mathrm{NV}^-)|_{E_F=0} - \mu(\mathrm{NV}^0) + (\mu_e(\mathrm{X_C^{Q+1}} \to \mathrm{X_C^Q}) - \mu_e(\mathrm{NV}^0 \to \mathrm{NV}^-))/2, \quad (8)$$

where $\mu(\mathrm{NV}^-)|_{E_F=0}$ is evaluated at a Fermi level of zero relative to the valence band maximum.

For the case where the defects are not perfectly isolated, the electronic chemical potentials that appear in Eqs. (3)–(7) are given by[39–41]

$$\mu_e(\mathrm{X}^{\mathrm{Q}_1} \to \mathrm{X}^{\mathrm{Q}_2}) = (\mathrm{Q}_2 - \mathrm{Q}_1) \cdot [E_{\mathrm{tot}}(\mathrm{X}^{\mathrm{Q}_1}) - E_{\mathrm{tot}}(\mathrm{X}^{\mathrm{Q}_2})], \quad (9)$$

where $E_{\mathrm{tot}}(\mathrm{X}^{\mathrm{Q}})$ represents the total energy of the X^{Q} system and $|\mathrm{Q}_1 - \mathrm{Q}_2| = 1$. The total energies for charged systems were corrected by the addition of the term $E_{\mathrm{corr}}(\mathrm{Q})$, described below, to account for the finite size of the supercell. With the addition of this term, the electronic chemical potential $\mu_e(\mathrm{NV}^0 \to \mathrm{NV}^-)$ varies by less than 0.1 eV when calculated for supercell sizes that are $2 \times 2 \times 2$, $3 \times 3 \times 3$, and $4 \times 4 \times 4$ multiples of the conventional unit cell. The other chemical potentials appearing in Eqs. (3)–(7) are given by[42]

$$\mu(\mathrm{X}) = E_f(\mathrm{X}) + U_{\mathrm{vib}}(\mathrm{X}) - TS(\mathrm{X}) + PV, \quad (10)$$

where $E_f(\mathrm{X})$ is the formation energy, $U_{\mathrm{vib}}(\mathrm{X})$ is the vibrational energy, $S(\mathrm{X})$ is the entropy of X, and PV accounts for changes in pressure and volume, which we can assume is a negligibly small contribution.[42] For $U_{\mathrm{vib}}(\mathrm{X})$ and $S(\mathrm{X})$, we have

$$U_{\mathrm{vib}}(\mathrm{X}) = \sum_i^{3N} \left\{ \frac{h\nu_i}{\exp(h\nu_i/k_BT) - 1} + \frac{1}{2}h\nu_i \right\}, \quad (11)$$

$$S(\mathrm{X}) = k_B \sum_i^{3N} \left\{ \frac{h\nu_i}{k_BT} \left[\exp\left(\frac{h\nu_i}{k_BT}\right) - 1 \right]^{-1} - \ln\left[1 - \exp\left(\frac{-h\nu_i}{k_BT}\right)\right] \right\}, \quad (12)$$

where ν_i are the frequencies of the normal modes of the X system. We note that since we consider equilibrium reactions, the entropy change $\Delta S(X)$ must be identically zero. Given that we consider adiabatic levels, we further have that the internal energy change $\Delta U_{\mathrm{vib}}(X)$ must also be identically zero.

The formation energy of a species, X^{Q}, is given by[6,43,44]

$$E_f(\mathrm{X}^{\mathrm{Q}}) = E_{\mathrm{def}}(\mathrm{X}^{\mathrm{Q}}) - E_0 - \sum_i \mu_i n_i + \mathrm{Q} \cdot (E_{\mathrm{VBM}} + E_{\mathrm{F}}) + E_{\mathrm{corr}}(\mathrm{Q}), \quad (13)$$

where Q denotes the charge state, with $\mathrm{Q} \in [-1, +1]$, $E_{\mathrm{def}}(\mathrm{X}^{\mathrm{Q}})$ is the total energy for the defect-containing supercell with charge state Q, E_0 is the total energy for the stoichiometric neutral supercell, μ_i is the chemical potential of atom i, n_i is a positive (negative) integer representing the number of atoms added (removed) from the system relative to the stoichiometric cell, E_{VBM} is the absolute position of the valence band maximum, E_{F} is the position of the Fermi level with respect to the valence band maximum (generally treated as a parameter), and $E_{\mathrm{corr}}(\mathrm{Q})$ is a correction term. The correction term $E_{\mathrm{corr}}(\mathrm{Q})$ accounts for the finite size of the supercell when performing calculations for charged defects as discussed by Vinichenko *et al.*[45] Briefly, this correction term does not simply treat the charged defect as a point charge but rather considers the extended charge distribution. As the chemical potentials of the N, P, and C atoms do not appear in the differences in formation energies for different charge states of a given defect, we have not used them for calculations in this work.

To comment on the correction energy, the calculation of formation energies using supercells with periodic boundary conditions suffers from the divergence of the energy for a charged defect. This is avoided by introducing a neutralizing background charge, which adds spurious terms to the total energy of the system.[45–53] As in other work,[49,50,52,54,55] Vinichenko *et al.*[45] correct these spurious terms by subtracting the electrostatic energy from the incorrect model with periodic boundary conditions and adding back an electrostatic energy extrapolated to the case of the isolated defect. The main advantage of the approach of Vinichenko *et al.*[45] is that it is general enough to be applied to two-dimensional materials as well as three-dimensional ones due to the manner in which it explicitly constructs the model cell dielectric profile. The charge defect position in the supercell plays a significant role in the accuracy of correction: a shift in the charge center from the surface for a two-dimensional slab by 0.15 bohr changes the calculated electrostatic energy by 0.1 eV.[45] This should not be a significant contribution to the error in our case, as we considered bulk defects. There are two other contributions to the error in the accuracy of the method: (i) the deviation from a cubic cell, which does not apply to our case since we use cubic supercells and (ii) errors associated with the common approximation of the defect charge density by a

Published under an exclusive license by AIP Publishing

Gaussian, which also does not apply to our case since we used charge densities from DFT. We report our results to within 0.1 eV as that was the largest deviation we found between our results and a similar theoretical work.[56]

It must be noted that quantities should be calculated in the limit where defects are in proximity. We have already argued that the entropy and internal energy changes must be identically zero regardless of the limit in which they are calculated. We will see below that if the formation energies and electronic chemical potentials are calculated for defects in the dilute limit, where defects are perfectly isolated, then the error between such computations and computations assuming proximity is still smaller than the difference between the adiabatic charge transition levels obtained in the dilute limit and the ZPL of the NV^- in diamond. It should also be noted that if all quantities are calculated in a given limit, our expressions for the $(0/-)$ adiabatic charge transition level for the conversion of NV^- to NV^0 in the presence of X_C^{Q+1} and the $((Q+1)/Q)$ adiabatic charge transition level for the conversion of X_C^Q to X_C^{Q+1} in the presence of NV^0 will be equal. This result must hold as we consider equilibrium reactions.

It is straightforward to obtain the sum of the formation energies of two defects in proximity, we simply create a neutral supercell with the two defects and then compute the formation energy for that supercell using Eq. (13). Though we cannot compute transition levels using Eq. (8) from such supercells, as differences in the total energies of the NV^- and X_C^{Q+1} or the NV^0 and X_C^Q enter into the calculation and not their sum, we can use such supercells to bound the error associated with assuming the dilute limit. Let $E_f(X+Y)$ be the formation energy for a supercell containing X and Y. We define $\epsilon_{X,Y} = E_f^{dil}(X) + E_f^{dil}(Y) - E_f(X+Y)$, where $E_f^{dil}(X)$ and $E_f^{dil}(Y)$ are computed in the dilute limit from Eq. (13). For charged defects with opposite charges, electrostatics dictates that the formation energy for the supercell containing two defects should be lower than the sum of the formation energies for the isolated defects. In our work, we indeed always find $\epsilon_{X,Y} > 0$. In general, if $E_f^{prox}(X)$ and $E_f^{prox}(Y)$ are the formation energies for defects in proximity to one another, $E_f^{prox}(X) = E_f^{dil}(X) - \alpha_{X,Y}$ and $E_f^{prox}(Y) = E_f^{dil}(Y) - (\epsilon_{X,Y} - \alpha_{X,Y})$, where $0 \le \alpha_{X,Y} \le \epsilon_{X,Y}$. Applying similar reasoning for the electronic chemical potentials, we see that

$$(0/-)^{prox} - (0/-)^{dil} = \Big((\epsilon_{NV^-,X_C^{Q+1}} - \alpha_{NV^-,X_C^{Q+1}}) - (\epsilon_{NV^0,X_C^Q} - \alpha_{NV^0,X_C^Q}) + \alpha_{NV^0,X_C^Q} - \alpha_{NV^-,X_C^{Q+1}}\Big)\Big/2, \tag{14}$$

where $(0/-)^{prox}$ is the adiabatic charge transition level for defects in proximity and $(0/-)^{dil}$ is the adiabatic charge transition level for defects in the dilute limit. Therefore,

$$|(0/-)^{prox} - (0/-)^{dil}| \le \Big(\epsilon_{NV^-,X_C^{Q+1}} + \epsilon_{NV^0,X_C^Q}\Big)\Big/2. \tag{15}$$

If X_C^Q is neutral, electrostatics implies that $\epsilon_{NV^0,X_C^Q} \le \epsilon_{NV^-,X_C^{Q+1}}$ so that

$$|(0/-)^{prox} - (0/-)^{dil}| \le \epsilon_{NV^-,X_C^{Q+1}}. \tag{16}$$

In calculating $\epsilon_{NV^-,X_C^{Q+1}}$, defects within the same supercell are placed such that the minimum distance between them is as large as possible with periodicity enforced.

For the case of the conversion of NV^- to NV^0 in the presence of N_C^0, we consider a neutral supercell with three defects and define $\epsilon_{X,Y,Z} = E_f^{dil}(X) + E_f^{dil}(Y) + E_f^{dil}(Z) - E_f(X+Y+Z)$. Then, applying the same reasoning as above, we find

$$|(0/-)^{prox} - (0/-)^{dil}| \le \Big(\epsilon_{NV^-,N_C^0,N_C^+} + \epsilon_{NV^0,N_C^-,N_C^+}\Big)/2. \tag{17}$$

For equal distances between the three defects, we should have $\epsilon_{NV^0,N_C^-,N_C^+} \approx \epsilon_{NV^-,N_C^0,N_C^+}$ so that

$$|(0/-)^{prox} - (0/-)^{dil}| \lesssim \epsilon_{NV^-,N_C^0,N_C^+}. \tag{18}$$

Given that a supercell with three defects that is the same size as a supercell with two defects will generally have smaller defect separations, to be able to make a fair comparison we take,

$$|(0/-)^{prox} - (0/-)^{dil}| \lesssim (\epsilon_{NV^-,N_C^0,N_C^+} - \tilde{\epsilon}_{NV^-,N_C^+}) + \epsilon_{NV^-,N_C^+}, \tag{19}$$

where the N_C^+ in the two-defect supercell that was used to calculate $\tilde{\epsilon}_{NV^-,N_C^+}$ was placed at the same separation from the NV^- as the N_C^+ in the three-defect supercell that was used to calculate $\epsilon_{NV^-,N_C^0,N_C^+}$. Such an approach to obtaining the error means that it still unnecessary to calculate the chemical potentials of the N, P, and C atoms.

III. RESULTS AND DISCUSSION

We begin by discussing the structure of the defects investigated in this work. The converged lattice constant of diamond for the conventional unit cell was $a = 3.539$ Å, in good agreement with a previous theoretical calculation of $a = 3.545$ Å.[56] We found an electronic bandgap of 5.4 eV, also in good agreement with previous experimental[57] and theoretical[58] results. The atomic structures of NV^0, NV^-, N_C^+, N_C^0, N_C^- P_C^+, and P_C^0, are shown in Fig. 1. The presence of the N substitutional atom and the adjacent C vacancy (V in the NV^- defect) breaks the tetrahedral symmetry of the diamond crystal so that only three-fold symmetry remains along the N–V direction, which is one of the [111] axes of the original crystal. The distance in the NV^- between the N and V positions is longer (1.86 Å) than the three remaining N–C bonds (1.47 Å), which are slightly shorter than the C–C bonds in the diamond crystal (1.53 Å). The NV^0 also exhibits breaking of the tetrahedral symmetry of the diamond crystal. Similar symmetry-breaking applies to the case of the N_C^0 defect. Indeed, for N_C^0, the symmetry is a threefold rotation around one of the originally equivalent four [111] axes of the diamond crystal because one of the N–C bonds is significantly longer (2.02 Å) than the other three (1.46 Å). Thus, the structure of the N_C^0 defect is essentially equivalent to that of the NV^- defect, both involving three strong N–C bonds and either the absence of a fourth bond (in NV^-) or a weak N–C bond (in N_C^0), the latter bond being 38% longer than the three strong bonds. These findings are consistent with previous theoretical work[59–63]

Published under an exclusive license by AIP Publishing

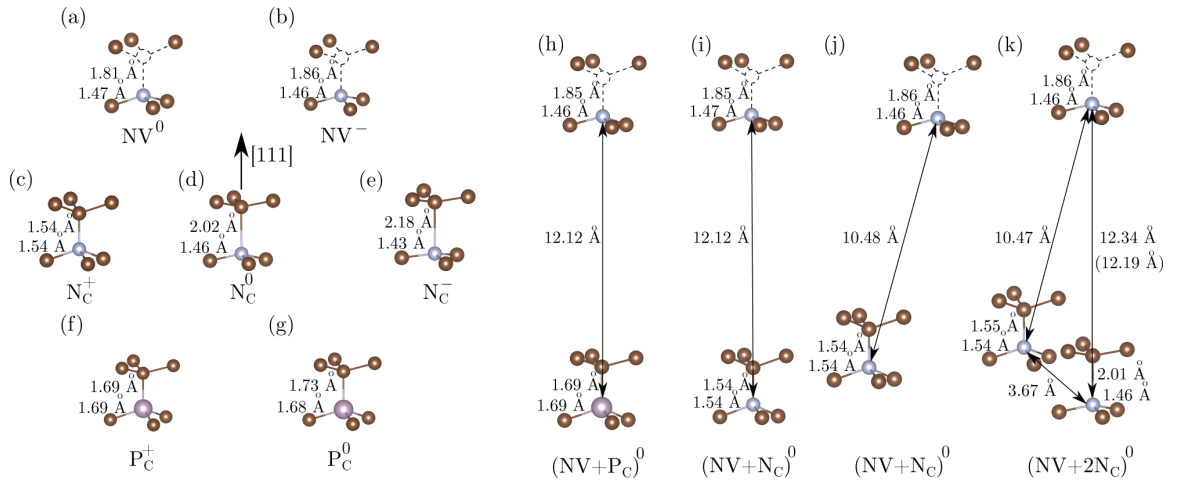

FIG. 1. Structure of (a) NV^0, (b) NV^-, (c) N_C^+, (d) N_C^0, (e) N_C^-, (f) P_C^+, (g) P_C^0 (h) $NV + P_C$ with total charge $Q = 0$, (i) $NV + N_C$ with total charge $Q = 0$, (j) $NV + N_C$ with total charge $Q = 0$ at a different defect separation compared to (i), and (k) $NV + 2N_C$ with total charge $Q = 0$, all with the same orientation as the one indicated in (d). Carbon atoms are shown in brown, phosphorus atoms in pink, and nitrogen atoms in purple. Carbon vacancies are shown as dashed circles. The distance between the C vacancy (V) and the N atom in the NV defects was obtained as described in the text. The distances between defects are measured between two N atoms or between the N atom and the P atom for the $NV + P_C$ supercell. All distances are minimum distances except for 12.34 Å, where the minimum distance was 12.19 Å if periodicity is enforced.

and with experiment.[64–66] The N_C^- defect exhibits the same structure as the N_C^0 defect with the longer bond having a length of 2.18 Å and the three shorter bonds being 1.43 Å in length. The N_C^+ defect preserves the tetrahedral symmetry of the diamond crystal, and the P_C^+ and P_C^0 defects show comparable structures to the N_C^+ and N_C^0 defects, respectively. The C_{3v} symmetry found for the P_C^0 defect is consistent with other literature studies.[67] We also considered supercells with multiple defects in order to estimate the error associated with assuming the dilute limit for the conversion of NV^- to NV^0 in the presence of X_C^{Q+1}. Given that the supercells we used imply very high concentrations of defects, our estimates should bound the actual error between the dilute limit and experimentally realized systems. Based on the bond lengths for the supercells [Figs. 1(h), 1(i) and 1(j)] containing two defects, we conclude that the NV in the supercells is indeed is NV^- and that the substitutional atom in the supercells has a single positive charge. For the supercell [Fig. 1(k)] with three defects, we conclude that the farther substitutional N defect is neutral, that the closer one has a single positive charge, and that the NV in the supercell is NV^-. The distances between defects in the supercells were chosen such that the distances between the NV and the substitutional atoms would be as large as possible. In the supercell with the additional substitutional atom, the distance between substitutional atoms was chosen to be as small as possible.

For the charge transition levels, we consider the cases where a NV^- is in the presence of the N^+, N^0, or P^+ substitutional impurities. We have included in Table I electronic chemical potentials and chemical potential differences for the $NV^- \rightarrow NV^0$, $N_C^+ \rightarrow N_C^0$, $N_C^0 \rightarrow N_C^-$, and $P_C^+ \rightarrow P_C^0$ transitions and comparisons with other literature studies. In Table II, we see that the adiabatic charge transition levels of the NV^- all lie near or below the ZPL of the NV^- of 1.945 eV. These charge transition levels are measured relative to the conduction band minimum given that the NV^- is acting as a donor.[56] If we consider three defects, two of which are substitutional N atoms and one of which is a NV^-, electrostatics dictates that under appropriate proximity conditions, we will have one N_C^+, one N_C^0, and one NV^-. Precisely, if we let $r_{X,Y}$ be the distance between X and Y, for $\frac{1}{r_{N_C^{(1)},N_C^{(2)}}} > \frac{1}{r_{N_C^{(1)},NV}} + \frac{2}{r_{N_C^{(2)},NV}}$, the electrostatic

TABLE I. Electronic chemical potentials and chemical potential differences in eV for adiabatic transitions. Values from other theories are in parentheses, values from experiments are in square brackets, and E_g is our theoretically calculated bandgap of 5.4 eV.

Electronic chemical potential or chemical potential difference	Energy
$\mu(NV^-)\|_{E_F=0} - \mu(NV^0)$	2.8 (2.7[a], 2.8[b])
$E_g - (\mu(N_C^0) - \mu(N_C^+)\|_{E_F=0})$	1.8 (1.8[a], 1.8[b]), [1.7[c]]
$\mu(N_C^-)\|_{E_F=0} - \mu(N_C^0)$	4.7 (4.6[a])
$E_g - (\mu(P_C^0) - \mu(P_C^+)\|_{E_F=0})$	0.7 [0.6[d]]
$\mu_e(NV^0 \rightarrow NV^-)$	12.2
$\mu_e(N_C^+ \rightarrow N_C^0)$	13.1
$\mu_e(N_C^0 \rightarrow N_C^-)$	14.2
$\mu_e(P_C^+ \rightarrow P_C^0)$	14.1

[a]HSE06 calculation for a 512-atom supercell using a cutoff in the plane-wave expansion for the wavefunction of 370 eV (Ref. 56).
[b]HSE06 calculation for a 64-atom supercell using a cutoff in the plane-wave expansion for the wavefunction of 400 eV (Ref. 2).
[c]Experimentally determined thermal activation energy of conduction (Ref. 71).
[d]Experimentally determined donor activation energy (Ref. 72).

Published under an exclusive license by AIP Publishing

TABLE II. Charge transition levels in the dilute limit and error, both in eV, for the NV^- in the presence of substitutional N^+, N^0, or P^+. Levels are given with respect to the conduction band minimum (E_C). The error was calculated as described in Sec. II. For the conversion of NV^- to NV^0 in the presence of substitutional N^0, we found $\epsilon_{NV^-,N_C^0,N_C^+} = 0.44$ eV and $\tilde{\epsilon}_{NV^-,N_C^+} = 0.38$ eV.

Charge transition level	Surrounding defect	Energy	Error
$(0/-)^{\mathrm{dil}}$	N_C^+	$E_C - 2.2$	0.05
	N_C^0	$E_C - 1.6$	0.11
	P_C^+	$E_C - 1.7$	0.18

energy of one N_C^+, one N_C^0, and one NV^- will be lower than the energy of two N_C^+ and one NV^{2-} for any nonzero screening length. Such an expression immediately implies that for a high enough concentration of substitutional N atoms, some neutral ones will exist near NV^- defects. Since the adiabatic charge transition level for NV^- in the presence of substitutional N^0 is lower than the corresponding transition level in the presence of substitutional N^+, we then conclude indirectly from Table II that higher concentrations of substitutional N impurities will lead to lower adiabatic charge transition levels. Consideration of intrinsic defects such as carbon vacancies does not change the argument that a higher concentration of substitutional N donors leads to lower adiabatic charge transition levels. Indeed, taking the dilute limit and using results from Deák *et al.*,[56] the adiabatic charge transition levels lie at least 3 eV below the conduction band minimum for NV^- in proximity to a carbon vacancy in any charge state except for -1. For the -1 charge state of the carbon vacancy, the adiabatic charge transition level is 1.5 eV below the conduction band. However, charge neutrality then requires at least two substitutional N donors in close proximity (one to supply the NV with an electron, and the other to supply the carbon vacancy with an electron). implying a high concentration of donors. Observed photoluminescence can be explained by the fact that in that case photoionization thresholds would apply instead of adiabatic charge transition levels.[68–70] Essentially, the results indicate that electroluminescence is unlikely to be observed for more than a very low concentration of substitutional N impurities.

IV. CONCLUSION

In summary, our results establish that ionization of the NV^- defect in diamond under an applied potential is enhanced as the concentration of substitutional N impurities is increased and that the mere presence of substitutional N or P donors lowers the adiabatic charge transition level for the NV^- transition to NV^0 near or below the ZPL of the NV^-, thus inhibiting electroluminescence. Nonetheless, as the adiabatic charge transition level for NV^- in the presence of N^+ substitutional impurities is higher than the ZPL of the NV^-, we believe electroluminescence would still be possible from NV^-. This result could be achieved by using ultra-low concentrations of nitrogen donors (equal to or below the concentration of NV^-) or a deeper donor than substitutional N. Fundamentally, we argue that observed electroluminescence is intimately coupled to high conversion efficiency of substitutional N impurities to NV defects, with near perfect conversion favoring the observation of electroluminescence.

ACKNOWLEDGMENTS

R.K.D. gratefully acknowledges financial support from the Princeton Presidential Postdoctoral Research Fellowship. We also acknowledge support by the STC Center for Integrated Quantum Materials, NSF (Grant No. DMR-1231319). This work used computational resources of the Extreme Science and Engineering Discovery Environment (XSEDE), which is supported by the National Science Foundation (Grant No. ACI-1548562),[73] of Stampede2 at TACC through Allocation No. TG-DMR120073, and of the National Energy Research Scientific Computing Center (NERSC), a U.S. Department of Energy Office of Science User Facility operated under Contract No. DE-AC02-05CH11231. We also thank the referees for their many critical and helpful suggestions that have been instrumental in improving the clarity of our paper.

AUTHOR DECLARATIONS

Conflict of Interest

The authors have no conflicts to disclose.

DATA AVAILABILITY

The data from the DFT calculations that support the findings of this study are available from the corresponding author upon reasonable request.

REFERENCES

[1] D. D. Awschalom, R. Hanson, J. Wrachtrup, and B. B. Zhou, Nat. Photonics **12**, 516 (2018).
[2] J. R. Weber, W. F. Koehl, J. B. Varley, A. Janotti, B. B. Buckley, C. G. Van de Walle, and D. D. Awschalom, Proc. Natl. Acad. Sci. U.S.A. **107**, 8513 (2010).
[3] R. Kuate Defo, X. Zhang, D. Bracher, G. Kim, E. Hu, and E. Kaxiras, Phys. Rev. B **98**, 104103 (2018).
[4] R. Kuate Defo, R. Wang, and M. Manjunathaiah, J. Comput. Sci. **36**, 101018 (2019).
[5] M. N. Gadalla, A. S. Greenspon, R. Kuate Defo, X. Zhang, and E. L. Hu, Proc. Natl. Acad. Sci. U.S.A. **118**, e2021768118 (2021).
[6] R. Kuate Defo, E. Kaxiras, and S. L. Richardson, J. Appl. Phys. **126**, 195103 (2019).
[7] R. Kuate Defo, H. Nguyen, M. J. H. Ku, and T. D. Rhone, J. Appl. Phys. **129**, 225105 (2021).
[8] R. Kuate Deto, E. Kaxiras, and S. L. Richardson, Phys. Rev. B **104**, 075158 (2021).
[9] C. L. Degen, Appl. Phys. Lett. **92**, 243111 (2008).
[10] M. W. Doherty, N. B. Manson, P. Delaney, F. Jelezko, J. Wrachtrup, and L. C. Hollenberg, Phys. Rep. **528**, 1 (2013).
[11] L. Rondin, J.-P. Tetienne, T. Hingant, J.-F. Roch, P. Maletinsky, and V. Jacques, Rep. Prog. Phys. **77**, 056503 (2014).
[12] R. Schirhagl, K. Chang, M. Loretz, and C. L. Degen, Annu. Rev. Phys. Chem. **65**, 83 (2014).
[13] C. Kurtsiefer, S. Mayer, P. Zarda, and H. Weinfurter, Phys. Rev. Lett. **85**, 290 (2000).
[14] F. Jelezko, T. Gaebel, I. Popa, M. Domhan, A. Gruber, and J. Wrachtrup, Phys. Rev. Lett. **93**, 130501 (2004).
[15] A. Gruber, A. Dräbenstedt, C. Tietz, L. Fleury, J. Wrachtrup, and C. V. Borczyskowski, Science **276**, 2012 (1997).
[16] G. Balasubramanian, P. Neumann, D. Twitchen, M. Markham, R. Kolesov, N. Mizuochi, J. Isoya, J. Achard, J. Beck, J. Tissler, V. Jacques, P. R. Hemmer, F. Jelezko, and J. Wrachtrup, Nat. Mater. **8**, 383 (2009).

Published under an exclusive license by AIP Publishing

[17]L. Childress, M. V. Gurudev Dutt, J. M. Taylor, A. S. Zibrov, F. Jelezko, J. Wrachtrup, P. R. Hemmer, and M. D. Lukin, Science **314**, 281 (2006).
[18]G. Balasubramanian, I. Y. Chan, R. Kolesov, M. Al-Hmoud, J. Tisler, C. Shin, C. Kim, A. Wojcik, P. R. Hemmer, A. Krueger, T. Hanke, A. Leitenstorfer, R. Bratschitsch, F. Jelezko, and J. Wrachtrup, Nature **455**, 648 (2008).
[19]J. R. Maze, P. L. Stanwix, J. S. Hodges, S. Hong, J. M. Taylor, P. Cappellaro, L. Jiang, M. V. G. Dutt, E. Togan, A. S. Zibrov, A. Yacoby, R. L. Walsworth, and M. D. Lukin, Nature **455**, 644 (2008).
[20]J. M. Taylor, P. Cappellaro, L. Childress, L. Jiang, D. Budker, P. R. Hemmer, A. Yacoby, R. Walsworth, and M. D. Lukin, Nat. Phys. **7**, 270 (2011).
[21]P. Neumann, J. Beck, M. Steiner, F. Rempp, H. Fedder, P. R. Hemmer, J. Wrachtrup, and F. Jelezko, Science **329**, 542 (2010).
[22]M. V. G. Dutt, L. Childress, L. Jiang, E. Togan, J. Maze, F. Jelezko, A. S. Zibrov, P. R. Hemmer, and M. D. Lukin, Science **316**, 1312 (2007).
[23]E. Togan, Y. Chu, A. S. Trifonov, L. Jiang, J. Maze, L. Childress, M. V. G. Dutt, A. S. Sørensen, P. R. Hemmer, A. S. Zibrov, and M. D. Lukin, Nature **466**, 730 (2010).
[24]L. Robledo, L. Childress, H. Bernien, B. Hensen, P. F. A. Alkemade, and R. Hanson, Nature **477**, 574 (2011).
[25]A. Lohrmann, S. Pezzagna, I. Dobrinets, P. Spinicelli, V. Jacques, J.-F. Roch, J. Meijer, and A. M. Zaitsev, Appl. Phys. Lett. **99**, 251106 (2011).
[26]N. Mizuochi, T. Makino, H. Kato, D. Takeuchi, M. Ogura, H. Okushi, M. Nothaft, P. Neumann, A. Gali, F. Jelezko, J. Wrachtrup, and S. Yamasaki, Nat. Photonics **6**, 299 (2012).
[27]A. Laucht, J. T. Muhonen, F. A. Mohiyaddin, R. Kalra, J. P. Dehollain, S. Freer, F. E. Hudson, M. Veldhorst, R. Rahman, G. Klimeck, K. M. Itoh, D. N. Jamieson, J. C. McCallum, A. S. Dzurak, and A. Morello, Sci. Adv. **1**, e1500022 (2015).
[28]D. Kim, Z. Shi, C. B. Simmons, D. R. Ward, J. R. Prance, T. S. Koh, J. K. Gamble, D. E. Savage, M. G. Lagally, M. Friesen, S. N. Coppersmith, and M. A. Eriksson, Nature **511**, 70 (2014).
[29]J. Medford, J. Beil, J. M. Taylor, S. D. Bartlett, A. C. Doherty, E. I. Rashba, D. P. Divincenzo, H. Lu, A. C. Gossard, and C. M. Marcus, Nat. Nanotechnol. **8**, 654 (2013).
[30]K. C. Nowack, F. H. L. Koppens, Y. V. Nazarov, and L. M. K. Vandersypen, Science **318**, 1430 (2007).
[31]J. R. Petta, A. C. Johnson, J. M. Taylor, E. A. Laird, A. Yacoby, M. D. Lukin, C. M. Marcus, M. P. Hanson, and A. C. Gossard, Science **309**, 2180 (2005).
[32]M. Alkahtani and P. Hemmer, Opt. Mater. Express **10**, 1224 (2020).
[33]G. Kresse and J. Hafner, Phys. Rev. B **47**, 558 (1993).
[34]G. Kresse and J. Furthmüller, Phys. Rev. B **54**, 11169 (1996).
[35]G. Kresse and D. Joubert, Phys. Rev. B **59**, 1758 (1999).
[36]J. Heyd, G. E. Scuseria, and M. Ernzerhof, J. Chem. Phys. **118**, 8207 (2003).
[37]A. V. Krukau, O. A. Vydrov, A. F. Izmaylov, and G. E. Scuseria, J. Chem. Phys. **125**, 224106 (2006).
[38]M. J. Frisch, G. W. Trucks, H. B. Schlegel, G. E. Scuseria, M. A. Robb, J. R. Cheeseman, G. Scalmani, V. Barone, G. A. Petersson, H. Nakatsuji, X. Li, M. Caricato, A. V. Marenich, J. Bloino, B. G. Janesko, R. Gomperts, B. Mennucci, H. P. Hratchian, J. V. Ortiz, A. F. Izmaylov, J. L. Sonnenberg, D. Williams-Young, F. Ding, F. Lipparini, F. Egidi, J. Goings, B. Peng, A. Petrone, T. Henderson, D. Ranasinghe, V. G. Zakrzewski, J. Gao, N. Rega, G. Zheng, W. Liang, M. Hada, M. Ehara, K. Toyota, R. Fukuda, J. Hasegawa, M. Ishida, T. Nakajima, Y. Honda, O. Kitao, H. Nakai, T. Vreven, K. Throssell, J. A. Montgomery, Jr., J. E. Peralta, F. Ogliaro, M. J. Bearpark, J. J. Heyd, E. N. Brothers, K. N. Kudin, V. N. Staroverov, T. A. Keith, R. Kobayashi, J. Normand, K. Raghavachari, A. P. Rendell, J. C. Burant, S. S. Iyengar, J. Tomasi, M. Cossi, J. M. Millam, M. Klene, C. Adamo, R. Cammi, J. W. Ochterski, R. L. Martin, K. Morokuma, O. Farkas, J. B. Foresman, and D. J. Fox, Gaussian 16, Revision C.01, Gaussian, Inc., Wallingford, CT, 2016.
[39]M. Franco-Pérez, J. L. Gázquez, P. W. Ayers, and A. Vela, J. Chem. Phys. **143**, 154103 (2015).
[40]J. P. Perdew, R. G. Parr, M. Levy, and J. L. Balduz, Phys. Rev. Lett. **49**, 1691 (1982).
[41]Y. Zhang and W. Yang, Theor. Chem. Acc. **103**, 346 (2000).
[42]E. Rauls, T. Frauenheim, A. Gali, and P. Deák, Phys. Rev. B **68**, 155208 (2003).
[43]S. B. Zhang and J. E. Northrup, Phys. Rev. Lett. **67**, 2339 (1991).
[44]C. Freysoldt, B. Grabowski, T. Hickel, J. Neugebauer, G. Kresse, A. Janotti, and C. G. Van de Walle, Rev. Mod. Phys. **86**, 253 (2014).
[45]D. Vinichenko, M. G. Sensoy, C. M. Friend, and E. Kaxiras, Phys. Rev. B **95**, 235310 (2017).
[46]C. W. M. Castleton, A. Höglund, and S. Mirbt, Modell. Simul. Mater. Sci. Eng. **17**, 084003 (2009).
[47]H.-P. Komsa, T. Rantala, and A. Pasquarello, Physica B: Condens. Matter **407**, 3063 (2012).
[48]A. Alkauskas, M. D. McCluskey, and C. G. Van de Walle, J. Appl. Phys. **119**, 181101 (2016).
[49]C. Freysoldt, J. Neugebauer, and C. G. Van de Walle, Phys. Status Solidi B **248**, 1067 (2011).
[50]C. Freysoldt, J. Neugebauer, and C. G. Van de Walle, Phys. Rev. Lett. **102**, 016402 (2009).
[51]H.-P. Komsa, T. T. Rantala, and A. Pasquarello, Phys. Rev. B **86**, 045112 (2012).
[52]Y. Kumagai and F. Oba, Phys. Rev. B **89**, 195205 (2014).
[53]C. W. M. Castleton, A. Höglund, and S. Mirbt, Phys. Rev. B **73**, 035215 (2006).
[54]H.-P. Komsa and A. Pasquarello, Phys. Rev. Lett. **110**, 095505 (2013).
[55]A. Walsh, npj Comput. Mater. **7**, 72 (2021).
[56]P. Deák, B. Aradi, M. Kaviani, T. Frauenheim, and A. Gali, Phys. Rev. B **89**, 075203 (2014).
[57]O. Madelung, *Semiconductors: Group IV Elements and III-V Compounds*, Data in Science and Technology (Springer-Verlag, 1991).
[58]K. Szász, T. Hornos, M. Marsman, and A. Gali, Phys. Rev. B **88**, 075202 (2013).
[59]A. Mainwood, Phys. Rev. B **49**, 7934 (1994).
[60]S. A. Kajihara, A. Antonelli, J. Bernholc, and R. Car, Phys. Rev. Lett. **66**, 2010 (1991).
[61]R. Jones, J. P. Goss, and P. R. Briddon, Phys. Rev. B **80**, 033205 (2009).
[62]P. R. Briddon, M. Heggie, and R. Jones, in *Defects in Semiconductors 16*, Materials Science Forum Vol. 83 (Trans Tech Publications Ltd., 1992), pp. 457–462.
[63]E. B. Lombardi, A. Mainwood, K. Osuch, and E. C. Reynhardt, J. Phys.: Condens. Matter **15**, 3135 (2003).
[64]R. J. Cook and D. H. Whiffen, Proc. R. Soc. Lond. A Math. Phys. Sci. **295**, 99 (1966).
[65]C. Ammerlaan, in *Defects and Radiation Effects in Semiconductors 1980*, Institute of Physics Conference Series N (Institute of Physics, 1981), pp. 81–94.
[66]W. V. Smith, P. P. Sorokin, I. L. Gelles, and G. J. Lasher, Phys. Rev. **115**, 1546 (1959).
[67]R. J. Eyre, J. P. Goss, P. R. Briddon, and J. P. Hagon, J. Phys.: Condens. Matter **17**, 5831 (2005).
[68]E. Londero, E. Bourgeois, M. Nesládek, and A. Gali, Phys. Rev. B **97**, 241202 (2018).
[69]M. Nesládek, L. M. Stals, A. Stesmans, K. Iakoubovskij, G. J. Adriaenssens, J. Rosa, and M. Vaněček, Appl. Phys. Lett. **72**, 3306 (1998).
[70]J. Rosa, M. Vaněček, M. Nesládek, and L. Stals, Diam. Relat. Mater. **8**, 721 (1999).
[71]J. Koppitz, O. F. Schirmer, and M. Seal, J. Phys. C: Solid State Phys. **19**, 1123 (1986).
[72]C. E. Nebel, in *Nanodiamonds*, Micro and Nano Technologies, edited by J.-C. Arnault (Elsevier, 2017), pp. 1–24.
[73]J. Towns, T. Cockerill, M. Dahan, I. Foster, K. Gaither, A. Grimshaw, V. Hazlewood, S. Lathrop, D. Lifka, G. D. Peterson, R. Roskies, J. R. Scott, and N. Wilkins-Diehr, Comput. Sci. Eng. **16**, 62 (2014).

Published under an exclusive license by AIP Publishing